ROYAL BPW 9150-1.6-K

CODE NUMBER

3019653

DESCRIPTION

1.6 gpf, Rough Brass Finish, Single Flush, Wheel Handle Control Stop, Royal® Concealed Manual Specialty Water Closet Bedpan Washer/Hydraulic Flushometer.

DETAILS

- Flush Volume: 1.6 gpf (6.0 Lpf)
- Finish: Rough Brass (RB)
- Valve: Diaphragm
- Valve Body Material: Semi-red Brass
- Fixture Type: Water Closet
- Fixture Connection: Top spud
- Control Stop: Wheel Handle (K)

FEATURES

- PERMEX synthetic rubber diaphragm with Dual Filtered Fixed Bypass
- Valve body, Cover, Tailpiece and Control Stop shall be in compliance with ASTM Alloy Classification for Semi-Red Brass
- Valve shall be in compliance to the applicable sections of ASSE 1037.

Variation Not Shown: Wheel Handle

COMPLIANCES & CERTIFICATIONS

(ADA Compliant, cUPC Certified, BAA Compliant)

RECOMMENDED SPECIFICATION

Valve Body, Cover, Tailpiece and Control Stop shall be in conformance with ASTM Alloy Classification for Semi- Red Brass. Valve shall be in compliance with the applicable sections of ASSE 1037 and ANSI/ASME 112.19.2.

VALVE OPERATING PRESSURE (FLOWING)

15–80 PSI (103–552 kPa). Specific fixtures may require greater minimum flowing pressure - consult manufacturer requirements.

DOWNLOADS

- Control Stop Repair and Maintenance Guide
- Flush Connections Flanges Repair and Maintenance Guide
- Tail Piece Repair and Maintenance Guide
- Slimline Bedpan Washer Repair and Maintenance Guide
- Additional Downloads

NOTES

All information contained within this document subject to change without notice.

Looking for other variations of the ROYAL BPW 9150 product? View the general spec sheet with all options.

Find a compatible urinal for this flushometer.
Find a compatible water closet for this flushometer.

Sloan 10500 Seymour Ave, Franklin Park, IL 60131
Phone: 800.982.5839 • Fax: 800.447.8329 • sloan.com

ROUGH-IN

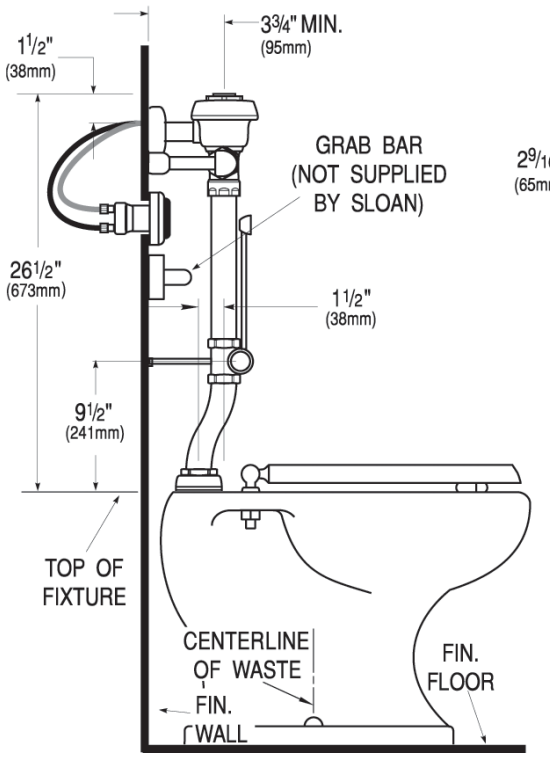

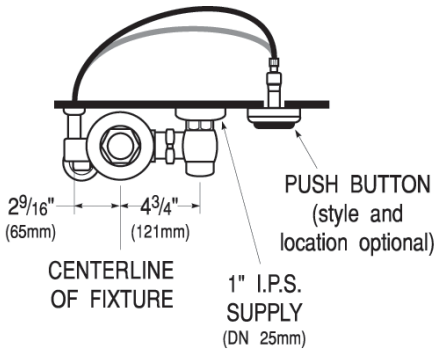

Sloan 10500 Seymour Ave, Franklin Park, IL 60131
Phone: 800.982.5839 • Fax: 800.447.8329 • sloan.com